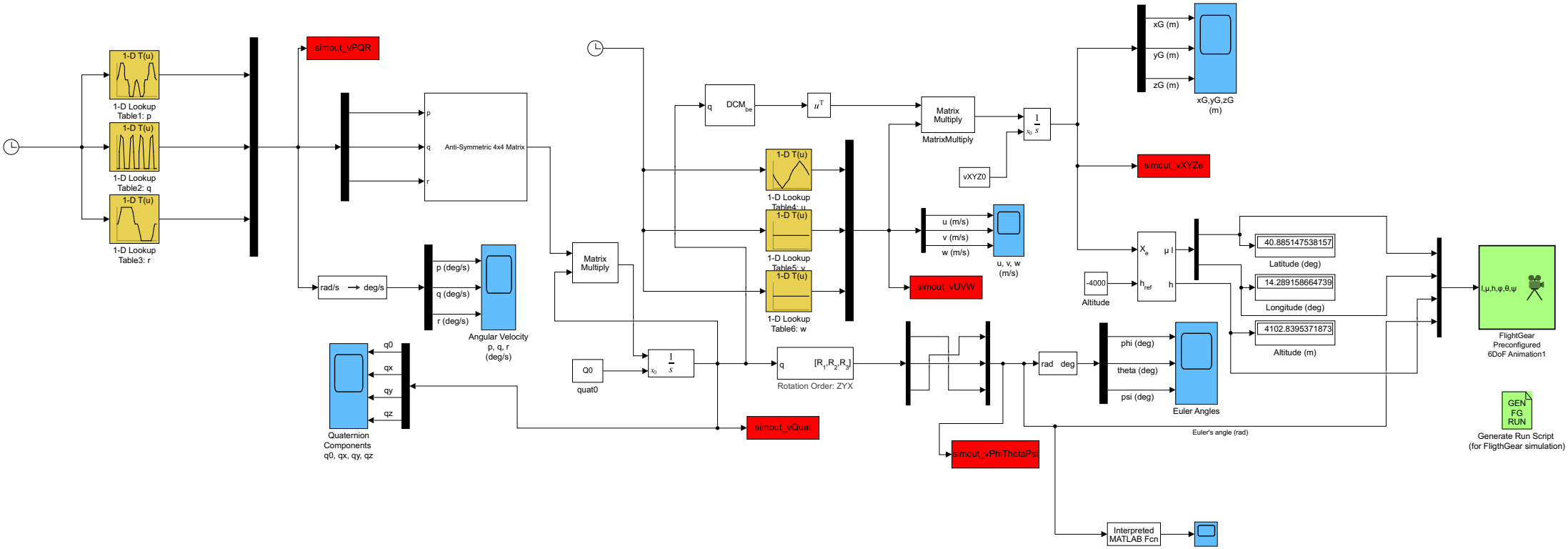
1-D T(u)
1-D Lookup Table1: p
1-D Lookup Table2: q
1-D Lookup Table3: r
simout_vPQR
Anti-Symmetric 4x4 Matrix
rad/s → deg/s
p (deg/s)
q (deg/s)
r (deg/s)
Angular Velocity p, q, r (deg/s)
Matrix Multiply
Q0
quat0
Quaternion Components q0, qx, qy, qz
simout_vQuat
DCM_be
1-D Lookup Table4: u
1-D Lookup Table5: v
1-D Lookup Table6: w
Rotation Order: ZYX
MatrixMultiply
vXYZ0
u (m/s)
v (m/s)
w (m/s)
u, v, w (m/s)
simout_vUVW
simout_vPhiThetaPsi
xG (m)
yG (m)
zG (m)
xG,yG,zG (m)
simout_vXYZe
-4000
Altitude
Latitude (deg)
40.885147538157
Longitude (deg)
14.289158664739
Altitude (m)
4102.8395371873
rad deg
phi (deg)
theta (deg)
psi (deg)
Euler Angles
Euler's angle (rad)
Interpreted MATLAB Fcn
l,μ,h,φ,θ,ψ
FlightGear Preconfigured 6DoF Animation1
GEN FG RUN
Generate Run Script (for FligthGear simulation)