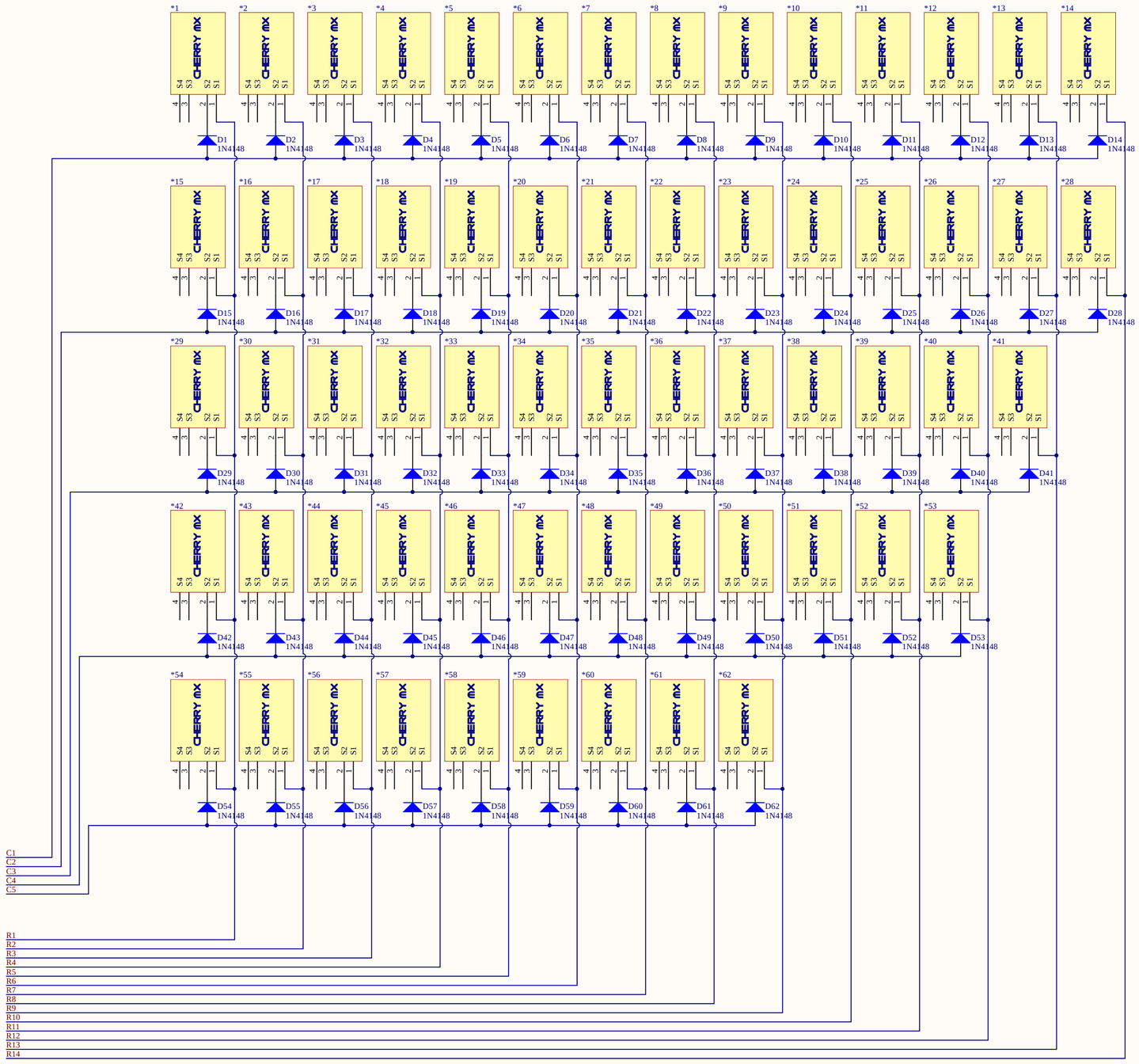
*1 CHERRY MX S4 S3 S2 S1 4 3 2 1 D1 1N4148
*2 CHERRY MX S4 S3 S2 S1 4 3 2 1 D2 1N4148
*3 CHERRY MX S4 S3 S2 S1 4 3 2 1 D3 1N4148
*4 CHERRY MX S4 S3 S2 S1 4 3 2 1 D4 1N4148
*5 CHERRY MX S4 S3 S2 S1 4 3 2 1 D5 1N4148
*6 CHERRY MX S4 S3 S2 S1 4 3 2 1 D6 1N4148
*7 CHERRY MX S4 S3 S2 S1 4 3 2 1 D7 1N4148
*8 CHERRY MX S4 S3 S2 S1 4 3 2 1 D8 1N4148
*9 CHERRY MX S4 S3 S2 S1 4 3 2 1 D9 1N4148
*10 CHERRY MX S4 S3 S2 S1 4 3 2 1 D10 1N4148
*11 CHERRY MX S4 S3 S2 S1 4 3 2 1 D11 1N4148
*12 CHERRY MX S4 S3 S2 S1 4 3 2 1 D12 1N4148
*13 CHERRY MX S4 S3 S2 S1 4 3 2 1 D13 1N4148
*14 CHERRY MX S4 S3 S2 S1 4 3 2 1 D14 1N4148
*15 CHERRY MX S4 S3 S2 S1 4 3 2 1 D15 1N4148
*16 CHERRY MX S4 S3 S2 S1 4 3 2 1 D16 1N4148
*17 CHERRY MX S4 S3 S2 S1 4 3 2 1 D17 1N4148
*18 CHERRY MX S4 S3 S2 S1 4 3 2 1 D18 1N4148
*19 CHERRY MX S4 S3 S2 S1 4 3 2 1 D19 1N4148
*20 CHERRY MX S4 S3 S2 S1 4 3 2 1 D20 1N4148
*21 CHERRY MX S4 S3 S2 S1 4 3 2 1 D21 1N4148
*22 CHERRY MX S4 S3 S2 S1 4 3 2 1 D22 1N4148
*23 CHERRY MX S4 S3 S2 S1 4 3 2 1 D23 1N4148
*24 CHERRY MX S4 S3 S2 S1 4 3 2 1 D24 1N4148
*25 CHERRY MX S4 S3 S2 S1 4 3 2 1 D25 1N4148
*26 CHERRY MX S4 S3 S2 S1 4 3 2 1 D26 1N4148
*27 CHERRY MX S4 S3 S2 S1 4 3 2 1 D27 1N4148
*28 CHERRY MX S4 S3 S2 S1 4 3 2 1 D28 1N4148
*29 CHERRY MX S4 S3 S2 S1 4 3 2 1 D29 1N4148
*30 CHERRY MX S4 S3 S2 S1 4 3 2 1 D30 1N4148
*31 CHERRY MX S4 S3 S2 S1 4 3 2 1 D31 1N4148
*32 CHERRY MX S4 S3 S2 S1 4 3 2 1 D32 1N4148
*33 CHERRY MX S4 S3 S2 S1 4 3 2 1 D33 1N4148
*34 CHERRY MX S4 S3 S2 S1 4 3 2 1 D34 1N4148
*35 CHERRY MX S4 S3 S2 S1 4 3 2 1 D35 1N4148
*36 CHERRY MX S4 S3 S2 S1 4 3 2 1 D36 1N4148
*37 CHERRY MX S4 S3 S2 S1 4 3 2 1 D37 1N4148
*38 CHERRY MX S4 S3 S2 S1 4 3 2 1 D38 1N4148
*39 CHERRY MX S4 S3 S2 S1 4 3 2 1 D39 1N4148
*40 CHERRY MX S4 S3 S2 S1 4 3 2 1 D40 1N4148
*41 CHERRY MX S4 S3 S2 S1 4 3 2 1 D41 1N4148
*42 CHERRY MX S4 S3 S2 S1 4 3 2 1 D42 1N4148
*43 CHERRY MX S4 S3 S2 S1 4 3 2 1 D43 1N4148
*44 CHERRY MX S4 S3 S2 S1 4 3 2 1 D44 1N4148
*45 CHERRY MX S4 S3 S2 S1 4 3 2 1 D45 1N4148
*46 CHERRY MX S4 S3 S2 S1 4 3 2 1 D46 1N4148
*47 CHERRY MX S4 S3 S2 S1 4 3 2 1 D47 1N4148
*48 CHERRY MX S4 S3 S2 S1 4 3 2 1 D48 1N4148
*49 CHERRY MX S4 S3 S2 S1 4 3 2 1 D49 1N4148
*50 CHERRY MX S4 S3 S2 S1 4 3 2 1 D50 1N4148
*51 CHERRY MX S4 S3 S2 S1 4 3 2 1 D51 1N4148
*52 CHERRY MX S4 S3 S2 S1 4 3 2 1 D52 1N4148
*53 CHERRY MX S4 S3 S2 S1 4 3 2 1 D53 1N4148
*54 CHERRY MX S4 S3 S2 S1 4 3 2 1 D54 1N4148
*55 CHERRY MX S4 S3 S2 S1 4 3 2 1 D55 1N4148
*56 CHERRY MX S4 S3 S2 S1 4 3 2 1 D56 1N4148
*57 CHERRY MX S4 S3 S2 S1 4 3 2 1 D57 1N4148
*58 CHERRY MX S4 S3 S2 S1 4 3 2 1 D58 1N4148
*59 CHERRY MX S4 S3 S2 S1 4 3 2 1 D59 1N4148
*60 CHERRY MX S4 S3 S2 S1 4 3 2 1 D60 1N4148
*61 CHERRY MX S4 S3 S2 S1 4 3 2 1 D61 1N4148
*62 CHERRY MX S4 S3 S2 S1 4 3 2 1 D62 1N4148
C1
C2
C3
C4
C5
R1
R2
R3
R4
R5
R6
R7
R8
R9
R10
R11
R12
R13
R14

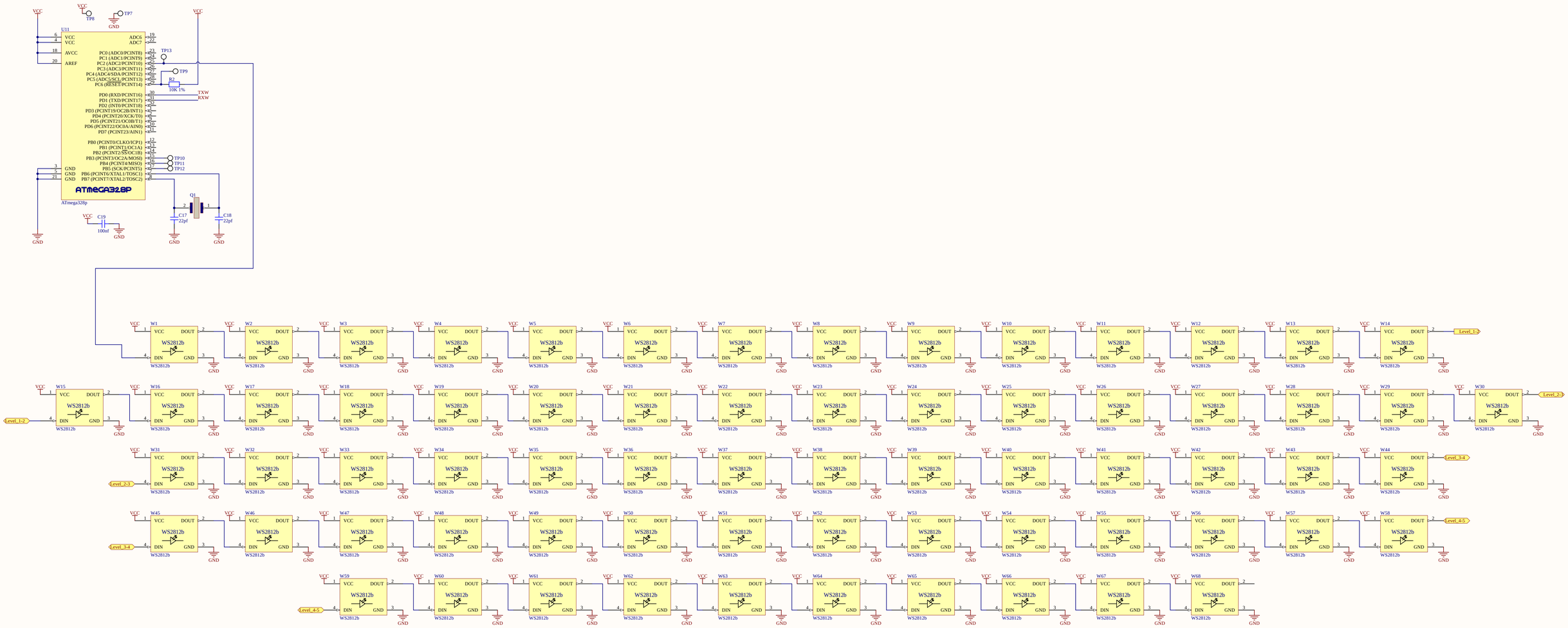
U11
ATmega328p
ATMEGA328P
VCC
GND
TP7
TP8
TP9
TP10
TP11
TP12
TP13
R2
10K 1%
TXW
RXW
Q1
C17
22pf
C18
22pf
C19
100nf
WS2812b
VCC
DOUT
DIN
GND
Level_1-2
Level_2-3
Level_3-4
Level_4-5

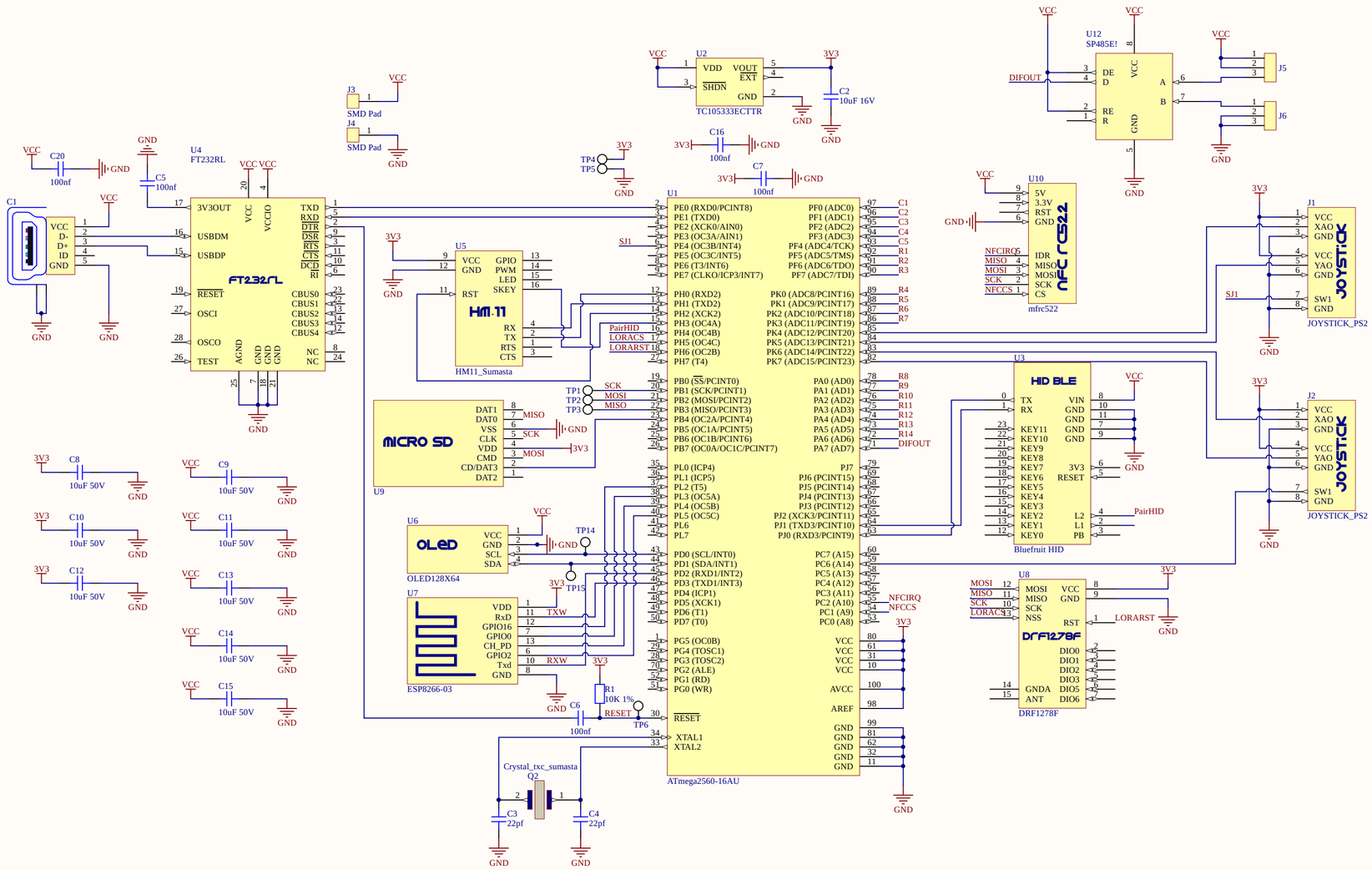
U4
FT232RL
FT232RL
3V3OUT
USBDM
USBDP
RESET
OSCI
OSCO
TEST
VCCIO
TXD
RXD
DTR
DSR
RTS
CTS
DCD
RI
CBUS0
CBUS1
CBUS2
CBUS3
CBUS4
NC
AGND
C1
VCC
D-
D+
ID
GND
C20
100nf
C5
100nf
C8
10uF 50V
C9
10uF 50V
C10
10uF 50V
C11
10uF 50V
C12
10uF 50V
C13
10uF 50V
C14
10uF 50V
C15
10uF 50V
J3
SMD Pad
J4
SMD Pad
U5
HM-11
HM11_Sumasta
VCC
GND
GPIO
PWM
LED
SKEY
RST
RX
TX
RTS
CTS
U9
MICRO SD
DAT1
DAT0
VSS
CLK
VDD
CMD
CD/DAT3
DAT2
MISO
SCK
MOSI
U6
OLED128X64
OLED
SCL
SDA
U7
ESP8266-03
VDD
RxD
GPIO16
GPIO0
CH_PD
GPIO2
Txd
TXW
RXW
TP14
TP15
R1
10K 1%
C6
100nf
RESET
TP6
U1
ATmega2560-16AU
PE0 (RXD0/PCINT8)
PE1 (TXD0)
PE2 (XCK0/AIN0)
PE3 (OC3A/AIN1)
PE4 (OC3B/INT4)
PE5 (OC3C/INT5)
PE6 (T3/INT6)
PE7 (CLKO/ICP3/INT7)
PH0 (RXD2)
PH1 (TXD2)
PH2 (XCK2)
PH3 (OC4A)
PH4 (OC4B)
PH5 (OC4C)
PH6 (OC2B)
PH7 (T4)
PB0 (SS/PCINT0)
PB1 (SCK/PCINT1)
PB2 (MOSI/PCINT2)
PB3 (MISO/PCINT3)
PB4 (OC2A/PCINT4)
PB5 (OC1A/PCINT5)
PB6 (OC1B/PCINT6)
PB7 (OC0A/OC1C/PCINT7)
PL0 (ICP4)
PL1 (ICP5)
PL2 (T5)
PL3 (OC5A)
PL4 (OC5B)
PL5 (OC5C)
PL6
PL7
PD0 (SCL/INT0)
PD1 (SDA/INT1)
PD2 (RXD1/INT2)
PD3 (TXD1/INT3)
PD4 (ICP1)
PD5 (XCK1)
PD6 (T1)
PD7 (T0)
PG5 (OC0B)
PG4 (TOSC1)
PG3 (TOSC2)
PG2 (ALE)
PG1 (RD)
PG0 (WR)
RESET
XTAL1
XTAL2
PF0 (ADC0)
PF1 (ADC1)
PF2 (ADC2)
PF3 (ADC3)
PF4 (ADC4/TCK)
PF5 (ADC5/TMS)
PF6 (ADC6/TDO)
PF7 (ADC7/TDI)
PK0 (ADC8/PCINT16)
PK1 (ADC9/PCINT17)
PK2 (ADC10/PCINT18)
PK3 (ADC11/PCINT19)
PK4 (ADC12/PCINT20)
PK5 (ADC13/PCINT21)
PK6 (ADC14/PCINT22)
PK7 (ADC15/PCINT23)
PA0 (AD0)
PA1 (AD1)
PA2 (AD2)
PA3 (AD3)
PA4 (AD4)
PA5 (AD5)
PA6 (AD6)
PA7 (AD7)
PJ7
PJ6 (PCINT15)
PJ5 (PCINT14)
PJ4 (PCINT13)
PJ3 (PCINT12)
PJ2 (XCK3/PCINT11)
PJ1 (TXD3/PCINT10)
PJ0 (RXD3/PCINT9)
PC7 (A15)
PC6 (A14)
PC5 (A13)
PC4 (A12)
PC3 (A11)
PC2 (A10)
PC1 (A9)
PC0 (A8)
VCC
AVCC
AREF
GND
PairHID
LORACS
LORARST
SJ1
NFCIRQ
NFCCS
DIFOUT
TP1
TP2
TP3
TP4
TP5
U2
TC105333ECTTR
VDD
VOUT
EXT
SHDN
GND
C2
10uF 16V
C16
100nf
C7
100nf
3V3
U12
SP485E!
DE
D
RE
R
A
B
J5
J6
U10
mfrc522
NFC RC522
5V
3.3V
RST
GND
IDR
MISO
MOSI
SCK
CS
NFCIRQ
NFCCS
J1
JOYSTICK_PS2
J2
JOYSTICK_PS2
JOYSTICK
VCC
XAO
GND
YAO
SW1
U3
Bluefruit HID
HID BLE
TX
RX
KEY11
KEY10
KEY9
KEY8
KEY7
KEY6
KEY5
KEY4
KEY3
KEY2
KEY1
KEY0
VIN
3V3
RESET
L2
L1
PB
U8
DRF1278F
DRF1278F
MOSI
MISO
SCK
NSS
RST
DIO0
DIO1
DIO2
DIO3
DIO5
DIO6
GNDA
ANT
LORARST
Crystal_txc_sumasta
Q2
C3
22pf
C4
22pf