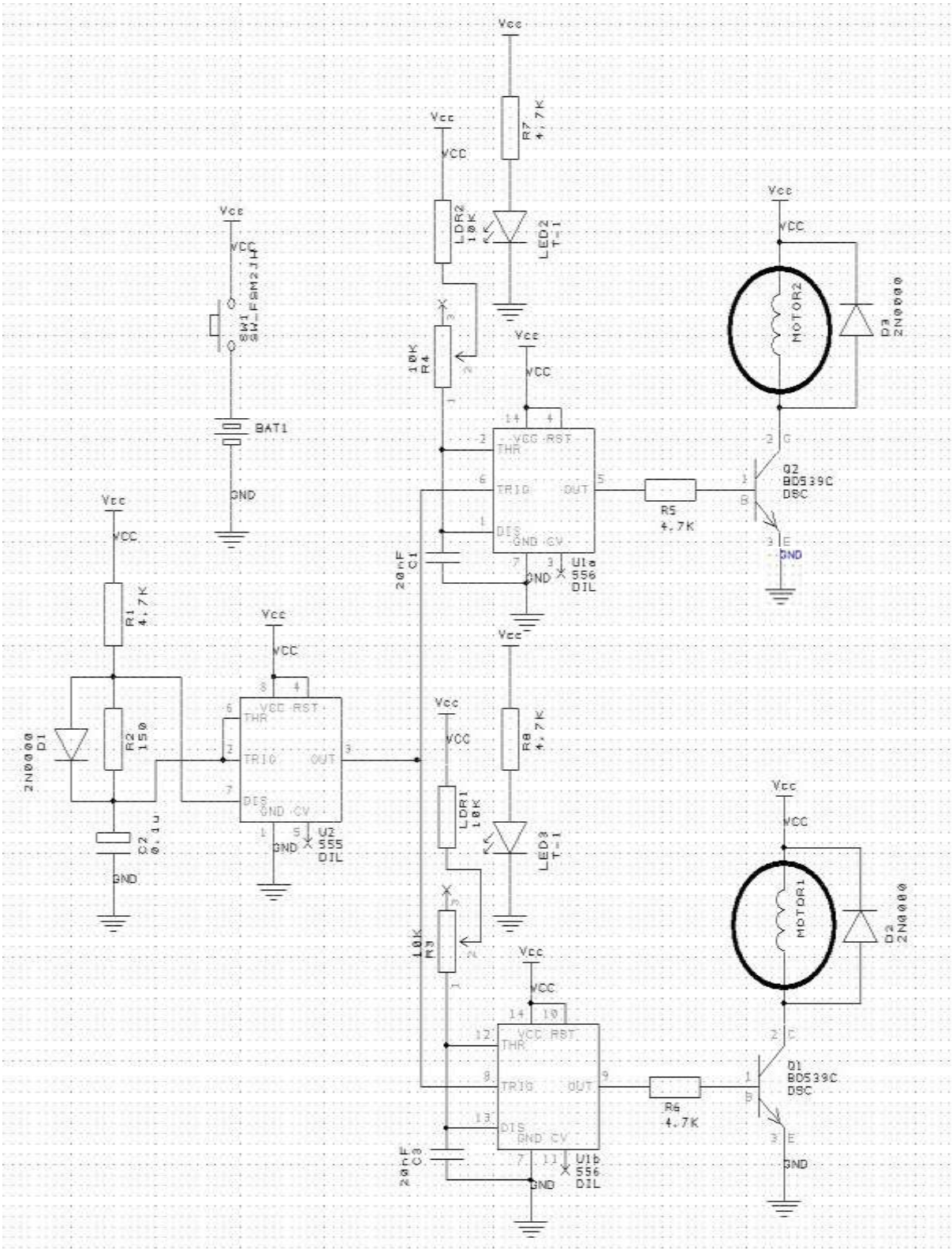U00106 Line Follower Schematic V1
(Note: Some components have been changed, see BOM)